〈SMALL-SIGNAL DIODE〉

MC2842

FOR HIGH SPEED SWITCHING APPLICATION
SILICON EPITAXIAL TYPE

DESCRIPTION

MC2842 is a super mini package plastic seal type silicon epitaxial type diode, especially designed for high speed switching application.

Due to the small pin capacitance, short switching time (reverse recovery time), It is most suitable for high speed switching application and limiter, clipper application.

FEATURE

- Small pin capacitance
- Quick switching time
- High voltage
- Super mini package for mounting

APPLICATION

For general high speed switching of audio machine, VTR.

OUTLINEDRAWING

Unit:mm

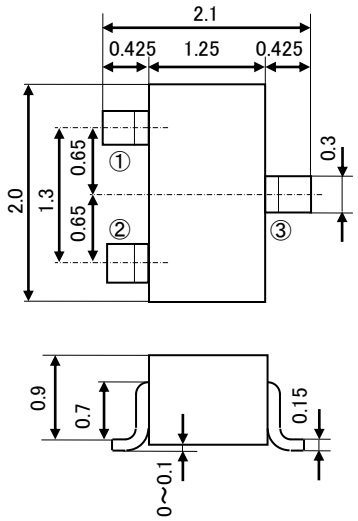

JEITA:SC-70
JEDEC:-
TERMINAL CONNECTION
①:NC
②:CATHODE
③:ANODE

MAXIMUM RATINGS (Ta=25℃)

Parameter	Symbol	Ratings	Unit
Peak reverse voltage	V_{RM}	75	V
DC reverse voltage	V_R	50	V
Surge current (1μsec)	I_{FSM}	4	A
Peak forward current	I_{FM}	300	mA
Average rectification current	I_O	100	mA
Total allowance dissipation	P_T	150	mW
Junction temperature	T_j	+150	℃
Storage temperature	T_{stg}	−55～+150	℃

INTERNAL CONNECTION	MARKING
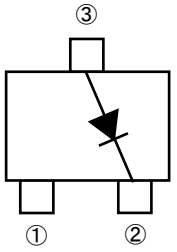	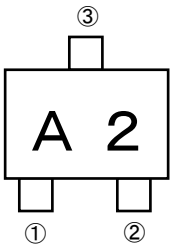

ELECTRICAL CHARACTERISTICS (Ta=25℃)

Parameter	Symbol	Test conditions	Limits			Uniit
			Min	Typ	Max	
Forward voltage	V_{F1}	I_F=10mA	−	0.77	0.9	V
	V_{F2}	I_F=50mA	−	0.90	1.0	
	V_{F3}	I_F=100mA	−	0.95	1.2	
Reverse current	I_R	V_R=50V	−	−	0.1	μA
Pin capacitance	C_t	V_R=0V, f=1MHz	−	2.8	4.0	pF
Reverse recovery time	trr	(Refer to test circuit)	−	−	4.0	ns

MC2842

FOR HIGH SPEED SWITCHING APPLICATION
SILICON EPITAXIAL TYPE

REVERSE RECOVERY TIME(trr)TEST CIRCUIT

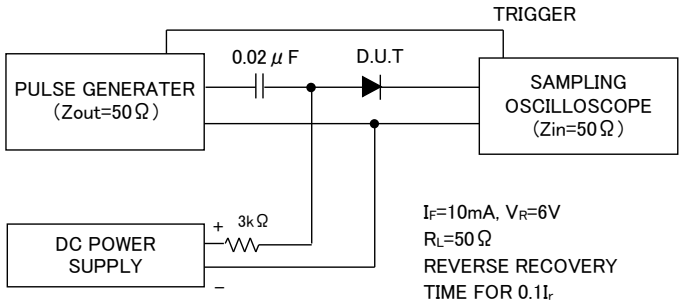

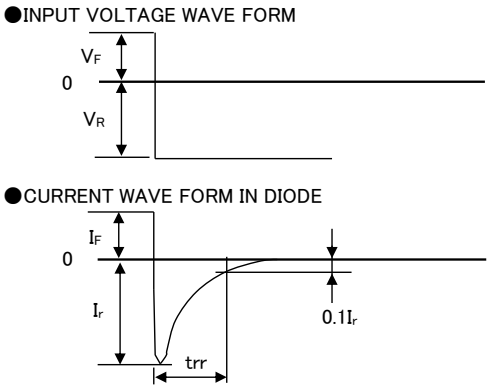

TYPICAL CHARACTERISTICS

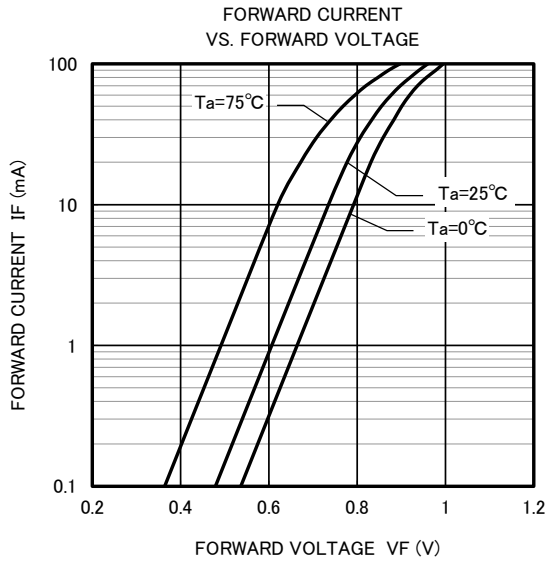

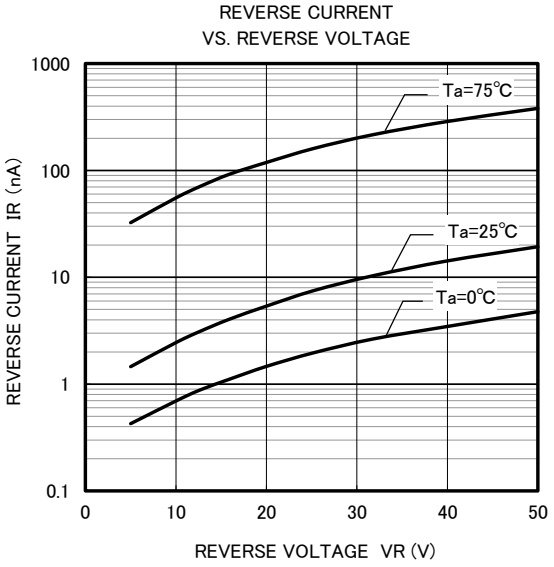

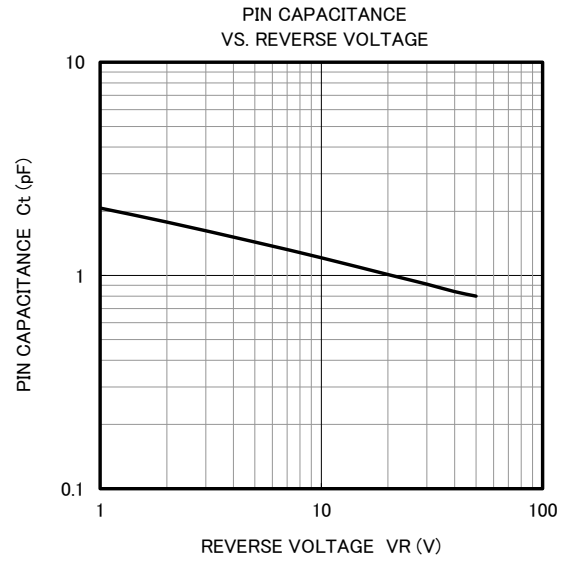

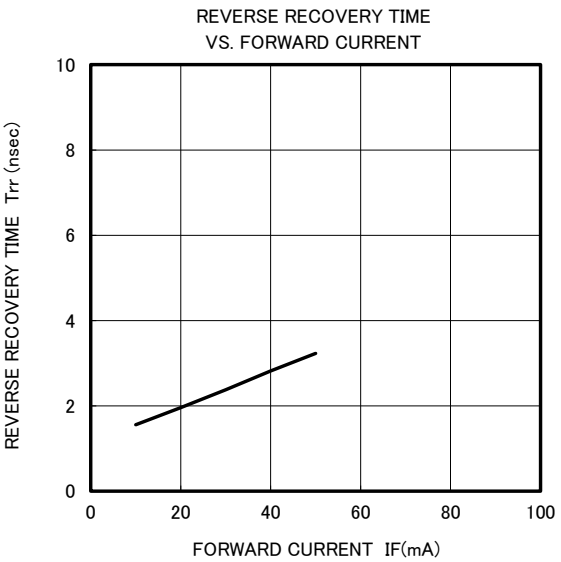

Keep safety first in your circuit designs!

·ISAHAYA Electronics Corporation puts the maximum effort into making semiconductor products better and more reliable, but there is always the possibility that trouble may occur with them. Trouble with semiconductors may lead to personal injury, fire or property damage. Remember to give due consideration to safety when making your circuit designs, with appropriate measures such as (1) placement of substitutive, auxiliary, (2) use of non-farmable material or (3) prevention against any malfunction or mishap.

Notes regarding these materials

·These materials are intended as a reference to our customers in the selection of the ISAHAYA products best suited to the customer's application; they don't convey any license under any intellectual property rights, or any other rights, belonging ISAHAYA or third party.

·ISAHAYA Electronics Corporation assumes no responsibility for any damage, or infringement of any third party's rights, originating in the use of any product data, diagrams, charts or circuit application examples contained in these materials.

·All information contained in these materials, including product data, diagrams and charts, represent information on products at the time of publication of these materials, and are subject to change by ISAHAYA Electronics Corporation without notice due to product improvements or other reasons. It is therefore recommended that customers contact ISAHAYA Electronics Corporation or an authorized ISAHAYA products distributor for the latest product information before purchasing product listed herein.

·ISAHAYA Electronics Corporation products are not designed or manufactured for use in a device or system that is used under circumstances in which human life is potentially at stake. Please contact ISAHAYA Electronics Corporation or an authorized ISAHAYA products distributor when considering the use of a product contained herein for any specific purposes, such as apparatus or systems for transportation, vehicular, medical, aerospace, nuclear, or undersea repeater use.

·The prior written approval of ISAHAYA Electronics Corporation is necessary to reprint or reproduce in whole or in part these materials.

·If these products or technologies are subject to the Japanese export control restrictions, they must be exported under a license from the Japanese government and cannot be imported into a country other than the approved destination. Any diversion or re-export contrary to the export control laws and regulations of Japan and/or the country of destination is prohibited.

·Please contact ISAHAYA Electronics Corporation or authorized ISAHAYA products distributor for further details on these materials or the products contained therein.